Packers

Made differently
Perform better

Casing Circulating Tool (CCT)

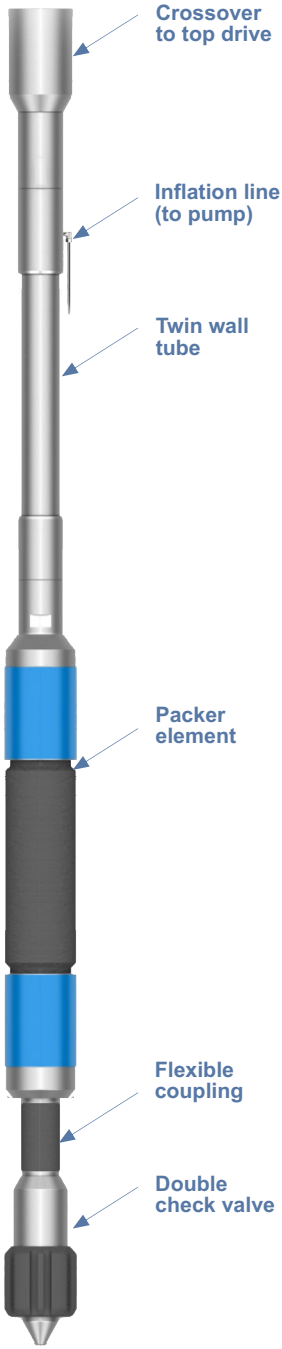

Inflatable Technology:

An inflatable element is a hydro-mechanical sealing device to be conveyed into a wellbore on a wide range of tool chassis. IPI's unique design of composite element allows the versatility to set in an ID significantly larger (+/- 300%) than its run in OD and where applicable be released and retrieved. The IPI design offers a true wellbore seal in both directions and has proven itself in over 13,000 applications to be the most robust inflatable element while offering the industry's best in class recoverability. Open hole, through tubing, cased hole, oval pipe, scale, perforated, nonstandard etc. conditions make IPI inflatable elements your path to success.

Product Description:

The Casing Circulation Tool (CCT) is a simple solution to quickly fill up and circulate while running casing. The CCT has been developed to aid and improve casing run-in operations. For filling, simply pump through the tool. The packer is left deflated to allow air to be displaced and only inflated when needed for circulation. Available for multiple sizes of casing the IPI CCT can handle circulation rates up to 10 bpm and 5,000 psi. The CCT is configurable to top drive or Kelly operations with or without bails.

Applications:

- Completions & drilling

Benefits:

- Simple rig up **enables normal casing running operations with the ability to insert and fill or inflate and have pressure integrity**
- Ability to circulate while reciprocating the casing
- Double check-valve **prevents mud leaks between uses**
- **Avoids time and risk of thread damage** with pump in subs
- One tool covers **multiple casing sizes**

Packers

Made differently
Perform better

Casing Circulating Tool (CCT)

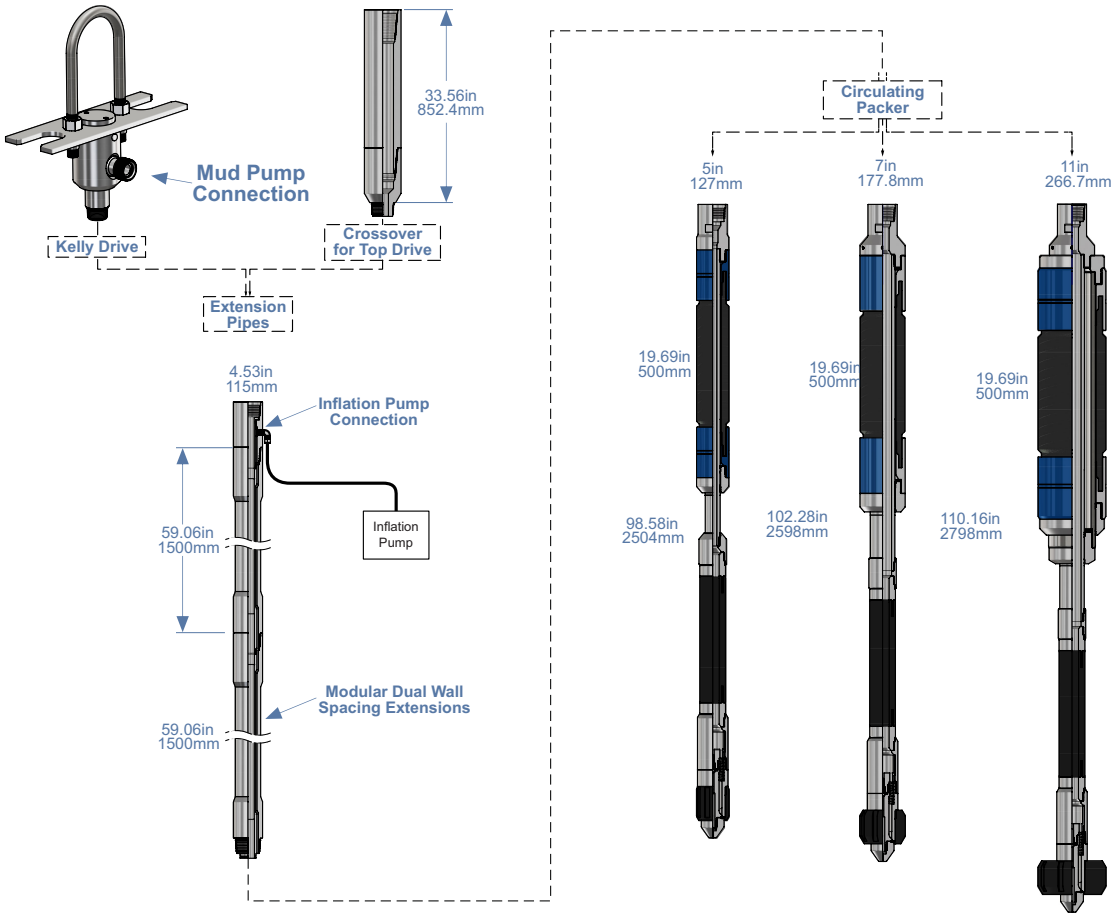

Packers Rated Pressure vs. Inflation Diameter:

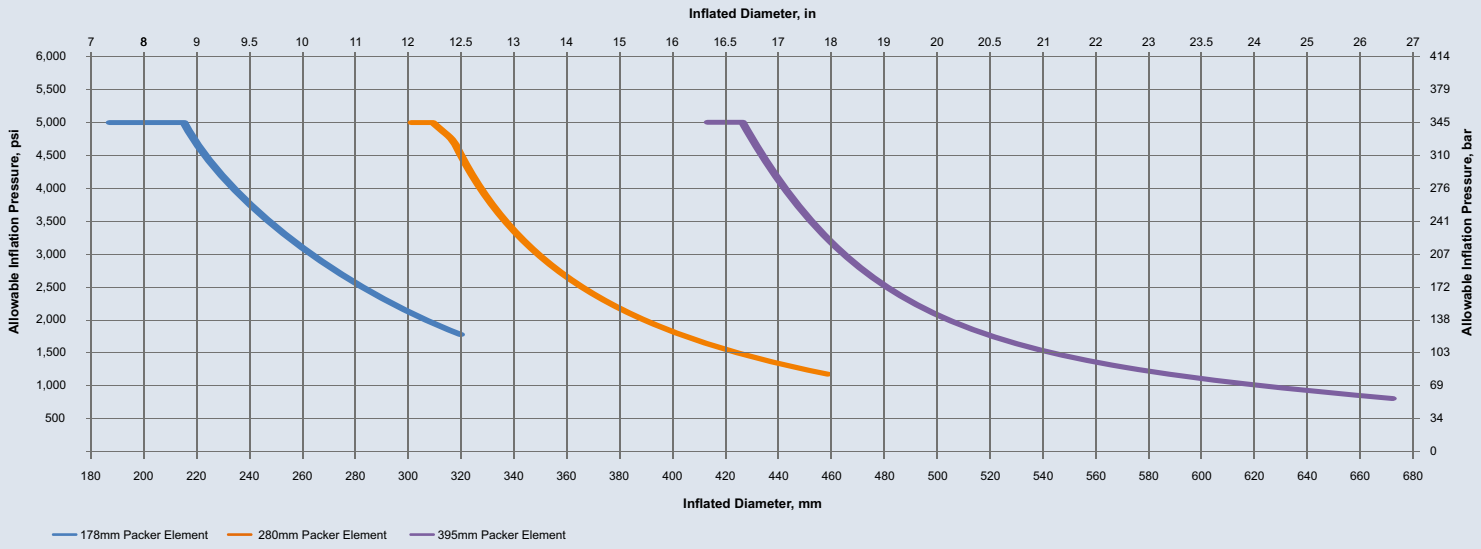

www.ipipackers.com